FLARE

Open Deeply Programmable Network Node Architecture

FLARE Node Development

FLARE Node Line Up

	Hardware Configuration	Interfaces	Release
FLARE	Intel x86 TileGX36	4 x 10GbE	2012 4Q
FLARE 2	Intel x86 TileGX36	2 x10GbE and 8 x GbE	2013 1Q
FLARE X	Intel x86 TileGX72	8 x 10GbE	2013 4Q
FLARE 3	Intel x86 TileGX72	2 x 10GbE and 24 x GbE	2015 1Q
FLARE DPDK	Intel x86 (DPDK)	2 to 8 x 10GbE	2015 2Q

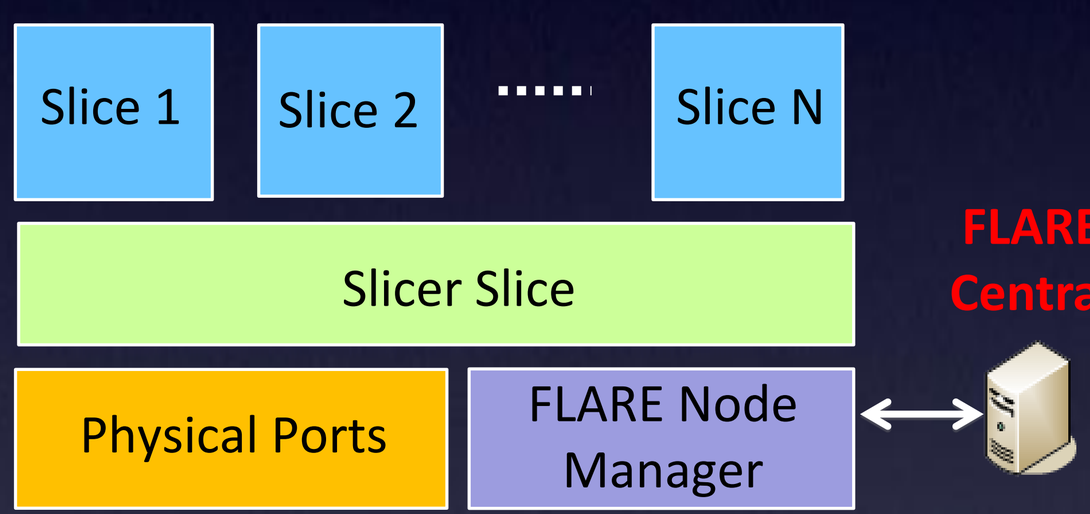

FLARE Node Architecture

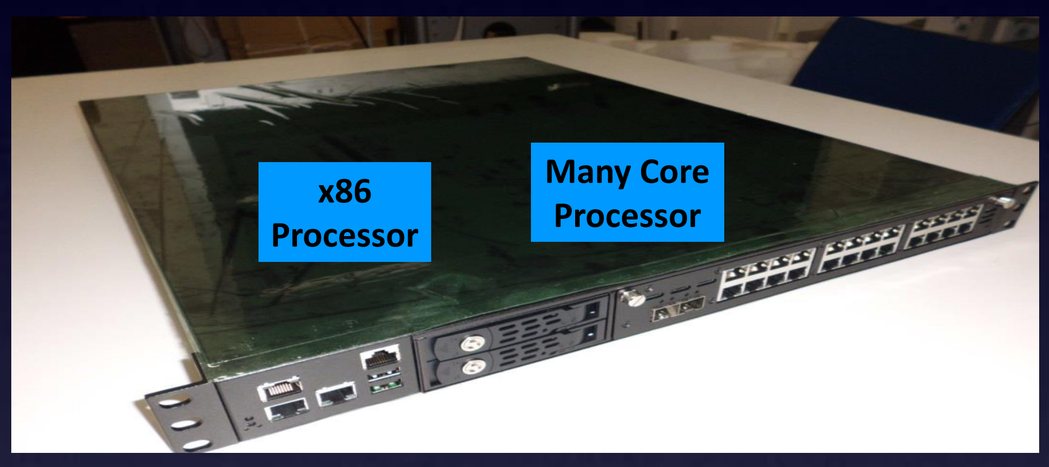

FLARE3 Node

Features and Specifications	
Control Plane	x86 CPU
Data Plane	72 core EZ-Chip NPU
Ports	24-port GbE and 2-port 10GbE SFP+ (or 8-port 10GbE SFP+)
Memory	Up to 128GB for NPU
Power	Redundant supply
Storage	Swappable SSD x2

LXC: Linux Container on Zero Overhead Linux (ZOL)

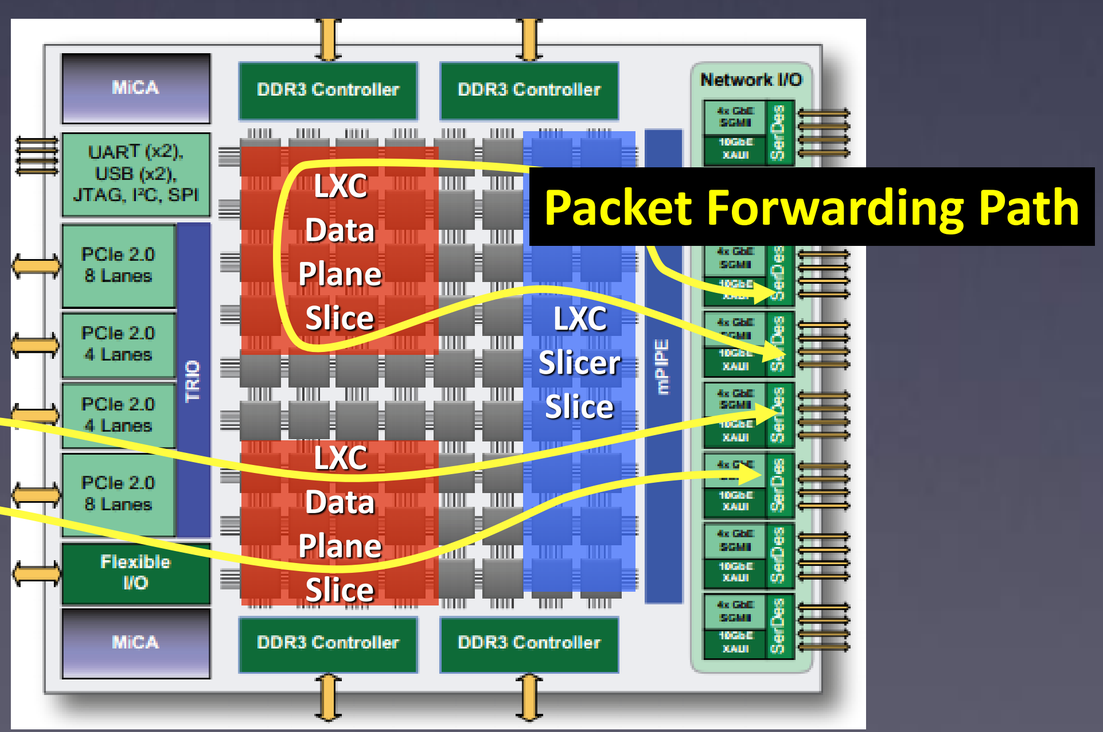

Slice Architecture

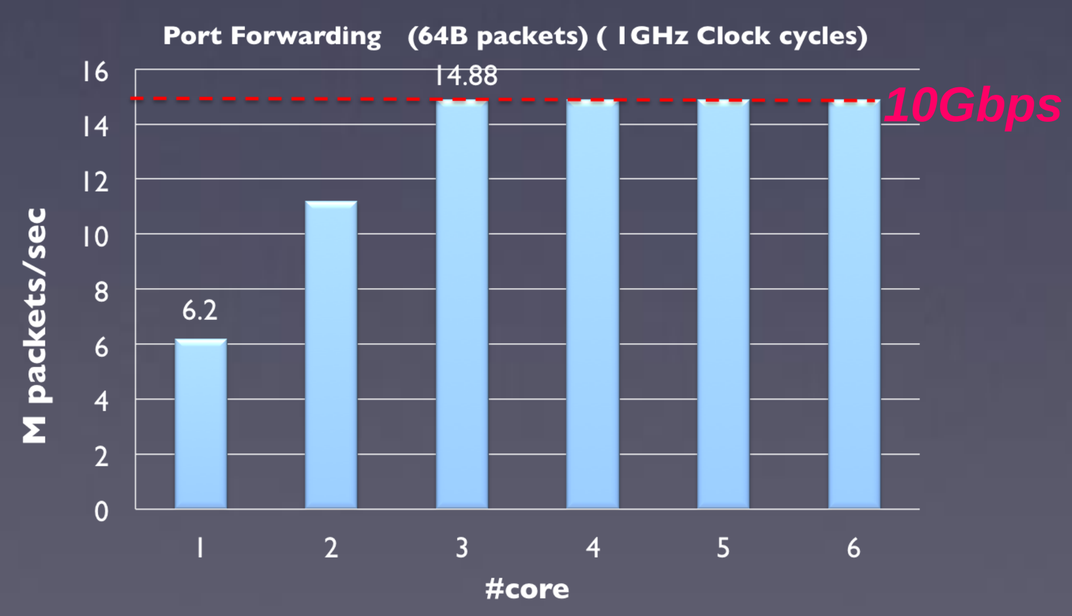

Packet I/O Performance

THE UNIVERSITY OF TOKYO

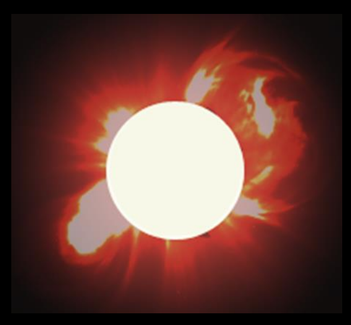

FLARE

Open Deeply Programmable Network Node Architecture

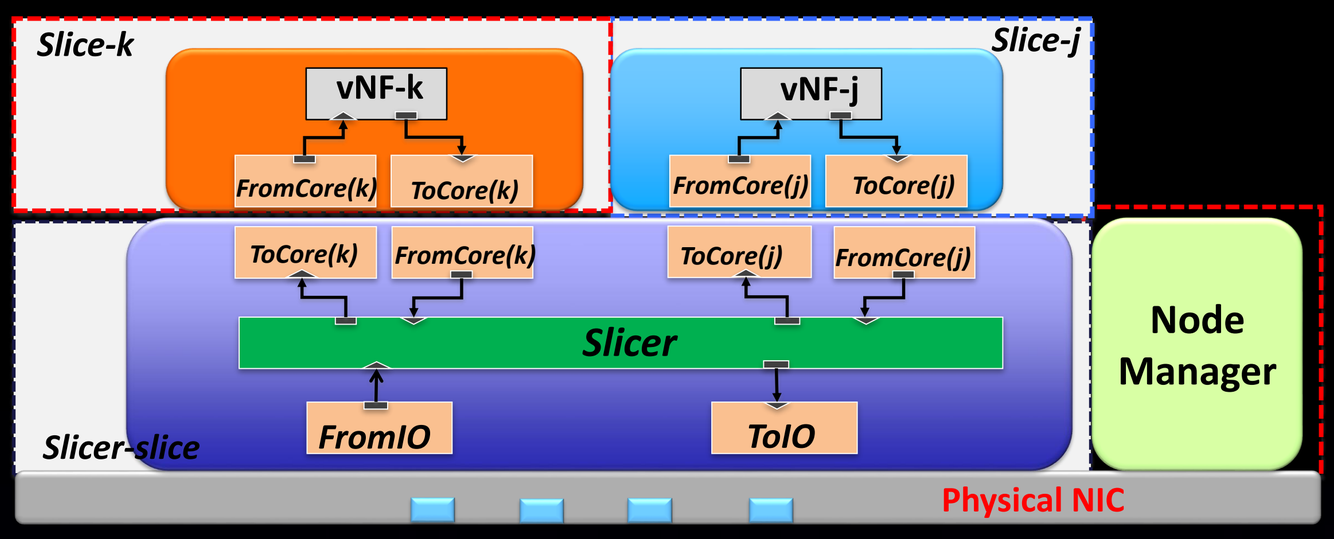

- Processor: two 10-core Intel Xeon E5-2687w v3@3.1GHz
- Memory: 16x16 GB DDR4
- Interface: two Intel X710 based quad-port 10GbE

FLARE DPDK Architecture

Port Forwarding

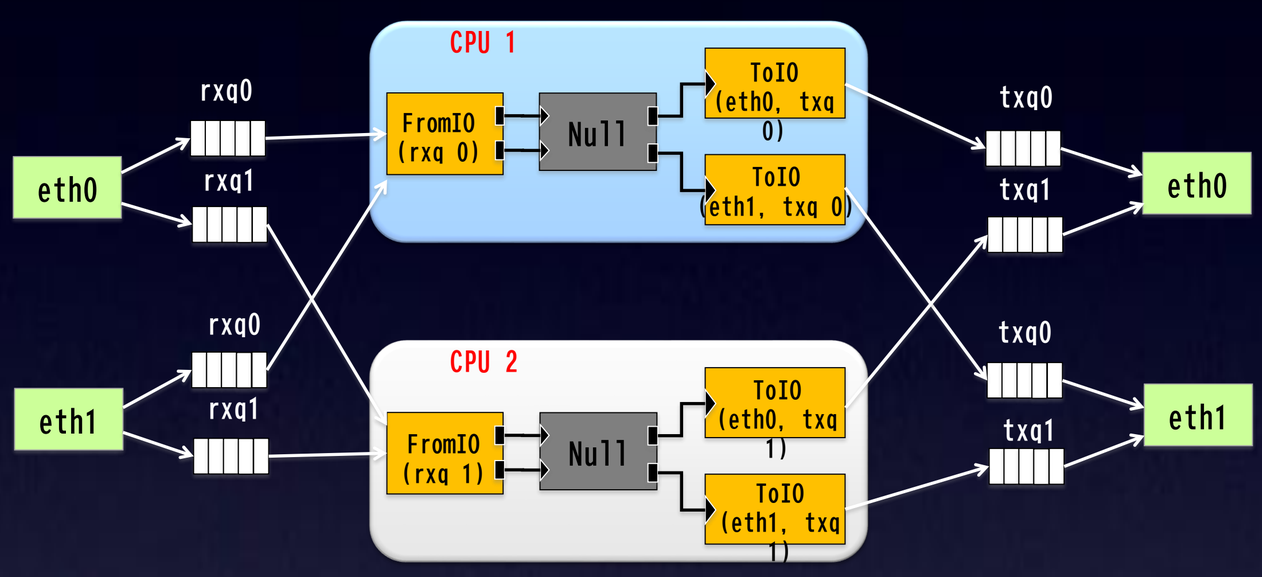

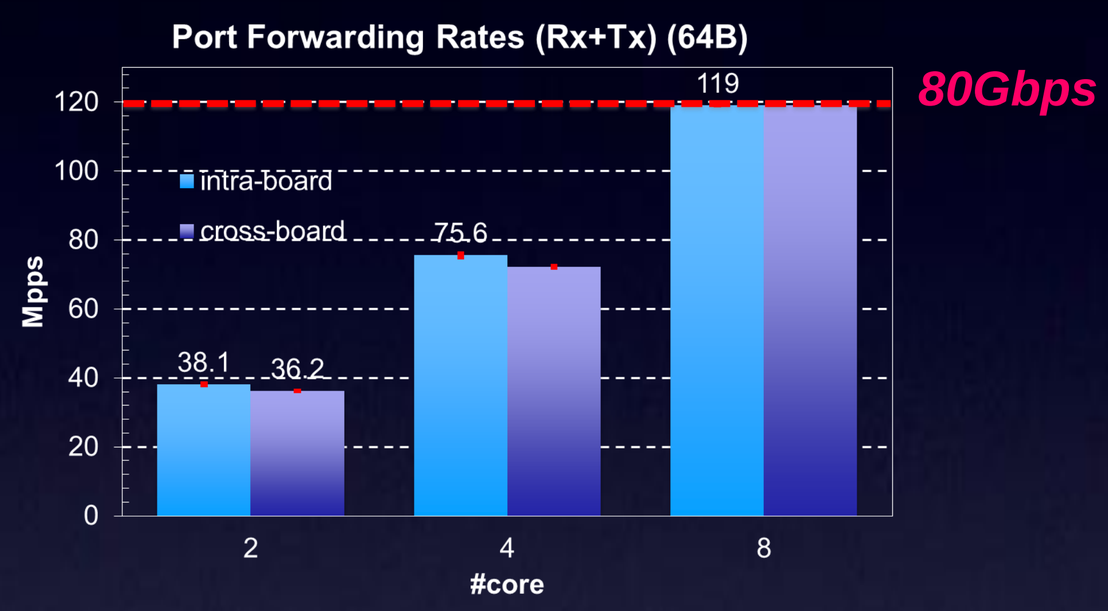

L2 Switch

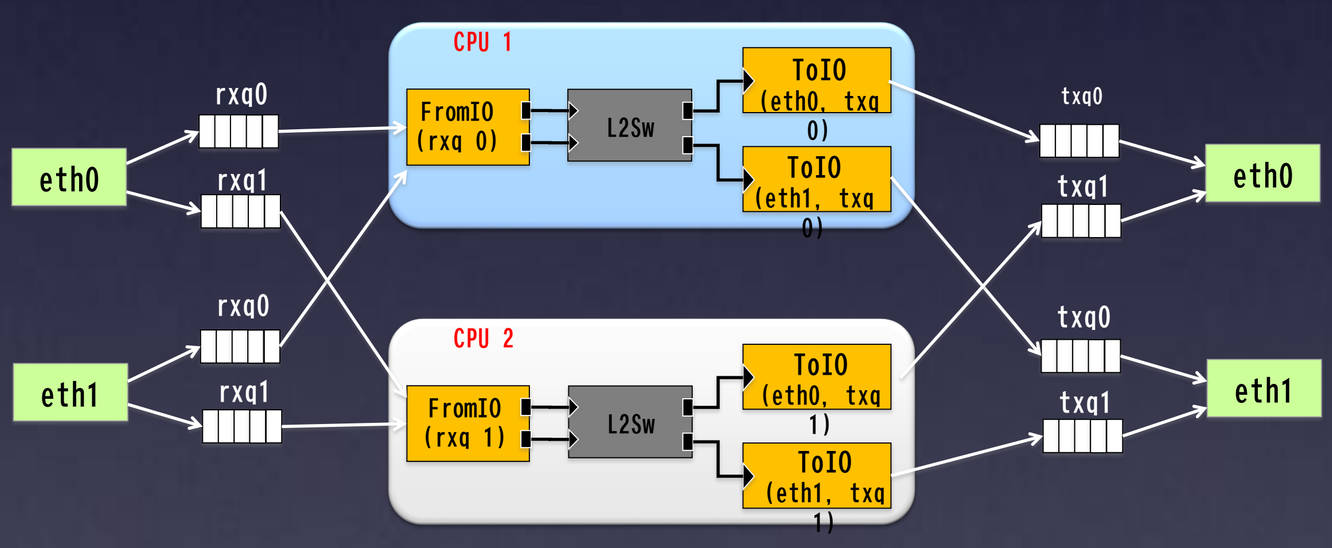

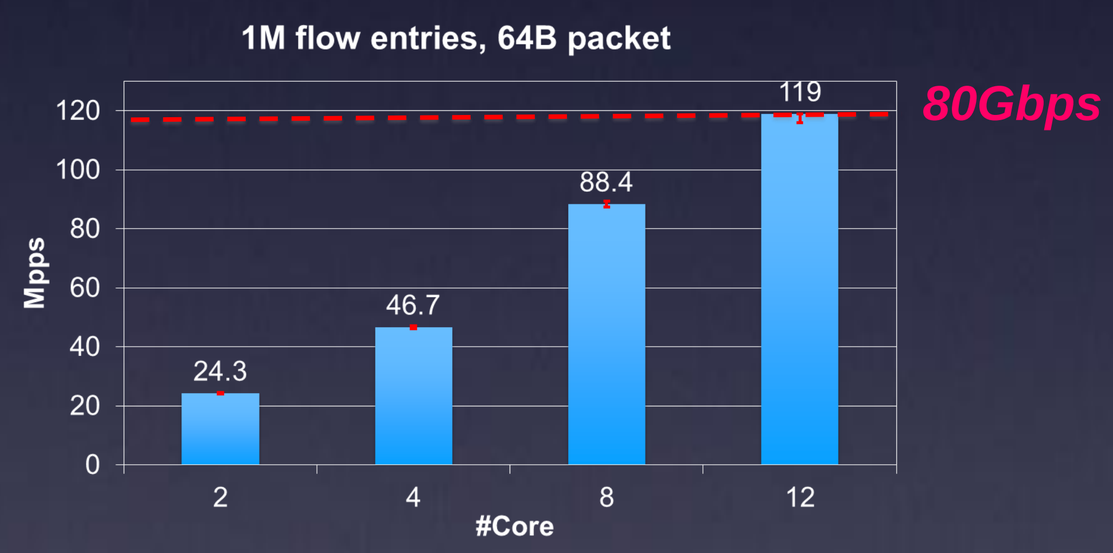

OpenFlow 1.3

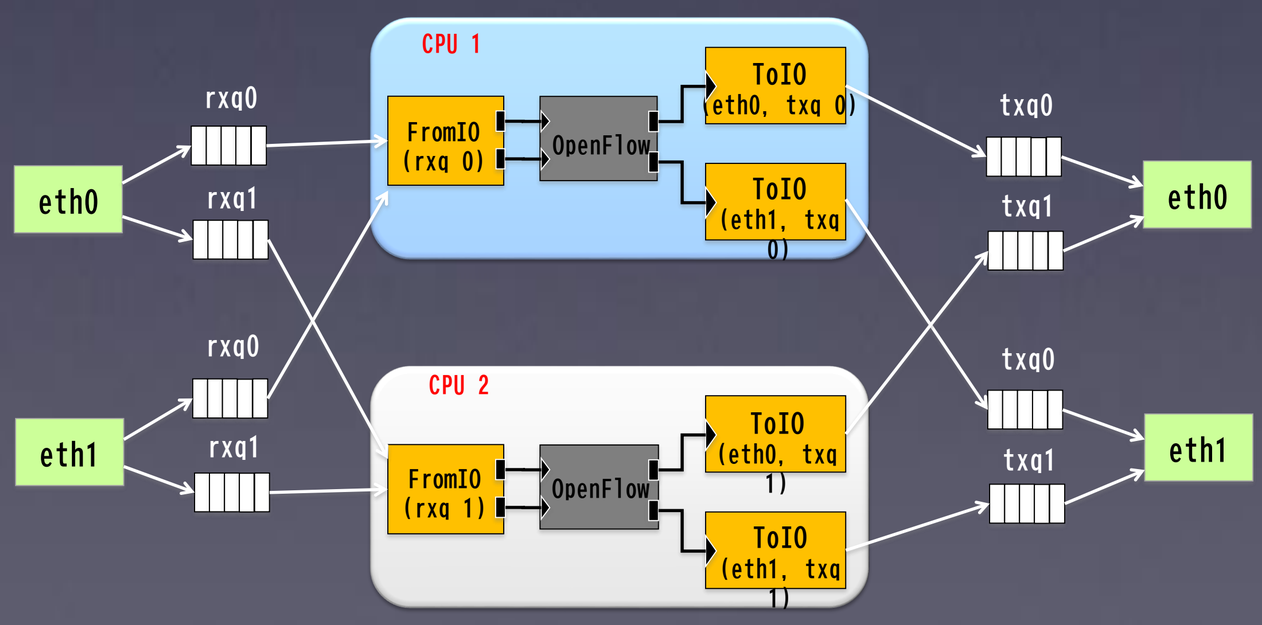

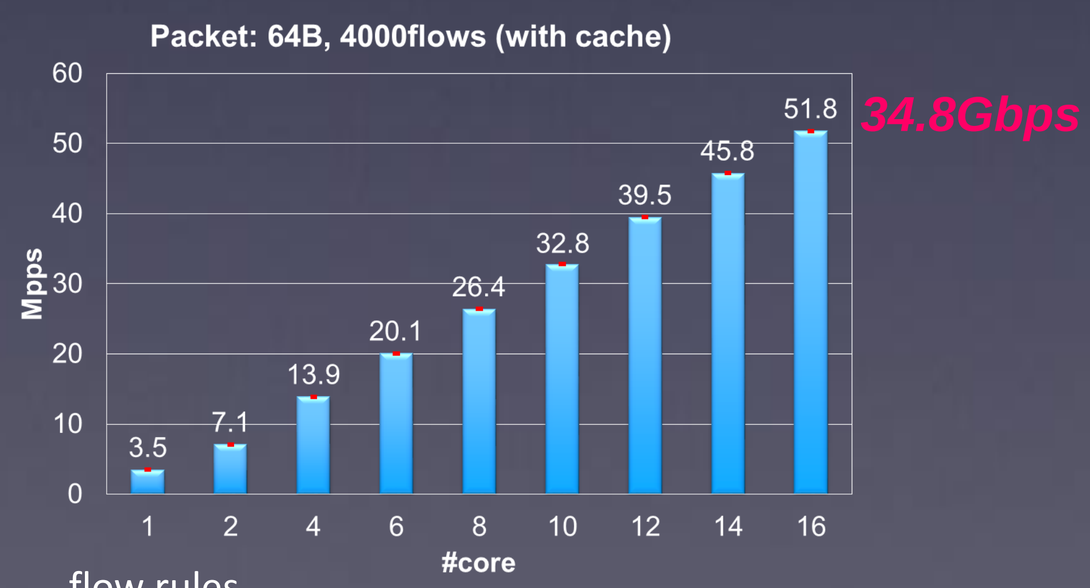

flow rules

- match: in_port=1, action: output=2
- match: in_port=2, action: output=1
- match: in_port=3, action: output=4
- match: in_port=4, action: output=3

THE UNIVERSITY OF TOKYO